ASSEMBLY INSTRUCTIONS FOR:

PL2PG6

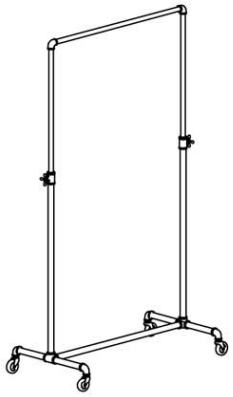

ASSEMBLED VIEW

1

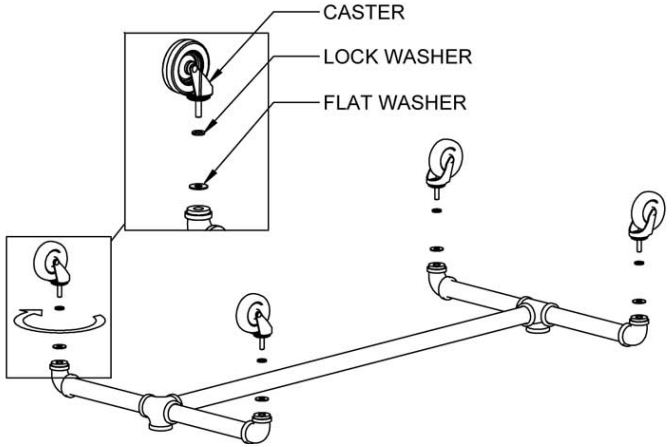

SCREW IN THE CASTERS TO THE BASE AS SHOWN USING PROVIDED WRENCH.

TOOLS INCLUDED

WRENCH

ALLEN KEY

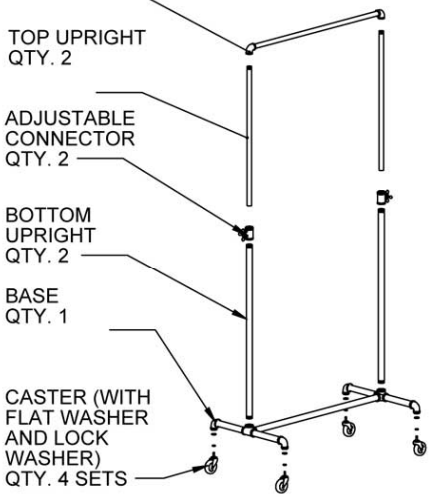

EXPLODED VIEW

2

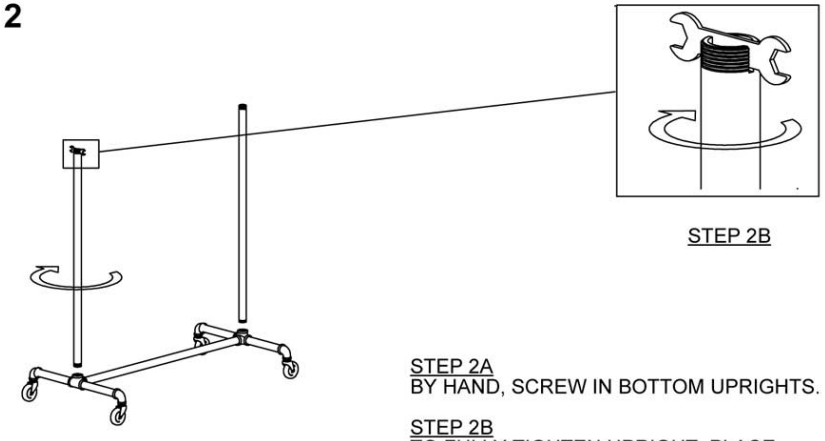

STEP 2B

STEP 2A

STEP 2A
BY HAND, SCREW IN BOTTOM UPRIGHTS.

STEP 2B
TO FULLY TIGHTEN UPRIGHT, PLACE INCLUDED WRENCH INTO PIPE SLOTS AS SHOWN. TIGHTEN FULLY

3

WITH ALLEN KEY, SLIGHTLY BACK OUT SET SCREWS ON ADJUSTABLE CONNECTOR.

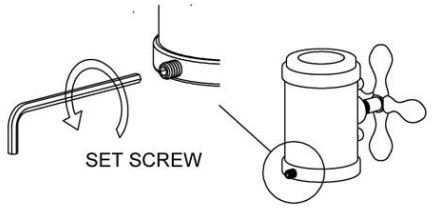

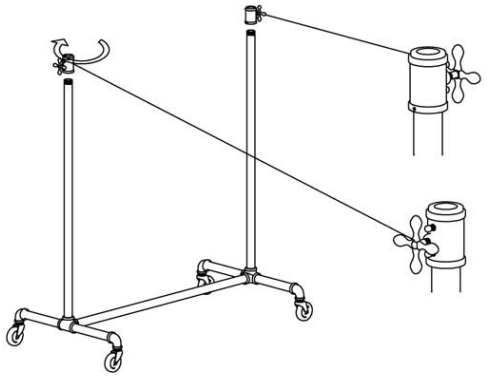

BY HAND, SCREW ADJUSTABLE CONNECTOR TO BOTTOM UPRIGHTS.

ADJUST SO THAT HAND WHEELS ALIGN TO THE OUTSIDE (AS SHOWN ON THE LEFT.)

TIGHTEN SET SCREW USING THE ALLEN KEY TO LOCK ADJUSTABLE CONNECTOR IN PLACE.

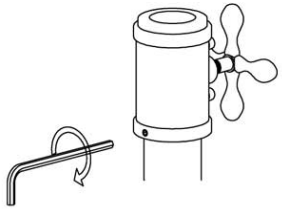

4

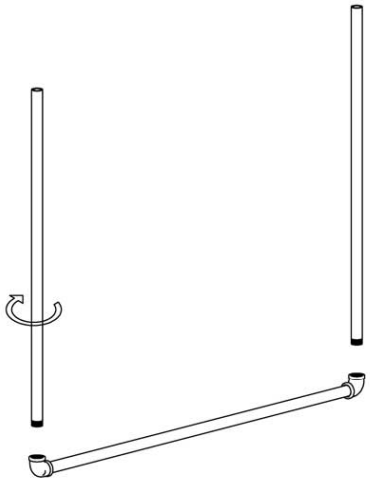

BY HAND, SCREW TOP UPRIGHTS TO HANGBAR.

5

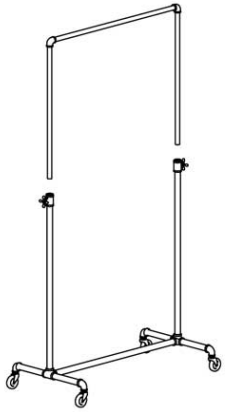

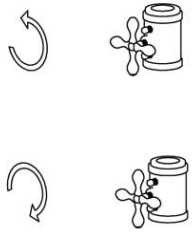

LOOSEN

TIGHTEN

- LOOSEN HAND WHEEL ON BOTH SIDES
- DROP HANGBAR INTO DESIRED HEIGHT
- LOCK IN POSITION BY TIGHTENING THE HAND WHEEL ON BOTH SIDES